SURFACE MOUNT CRYSTAL OSCILLATOR FCXO-05W

NEW PRODUCTS!

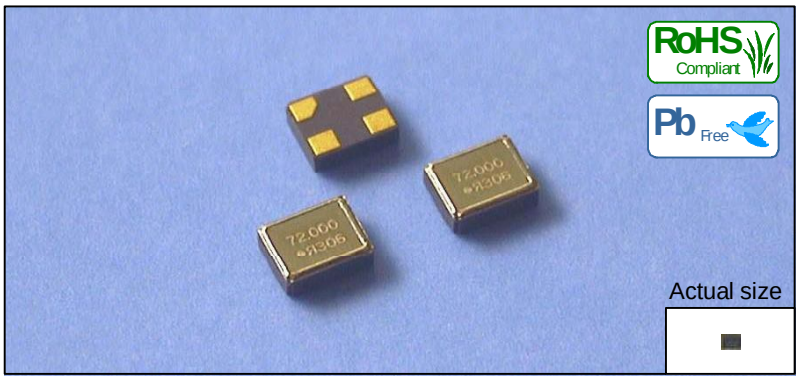

Features

- Compact design
  (2.5mm×2.0mm×0.9mm Max., Weight:13mg).
- A wider range of operating temperature is supported
  :−40 to 105℃
- A wider range of operating supply voltage is supported
  :1.60 to 3.63V
- The ceramic package and the metal lid sealed by electron beam ensure higher accuracy and reliability.
- Lead-free soldering is available.
- Applications:Laptop PC, DSC, DVC, W-LAN

Specifications

Item	Standard specifications		
Frequency range(MHz)	1.0 to 80.0		
Frequency tolerance (ppm)(at 25°C)	±10, ±20 30, ±50, 100		
V_{DD} sensitivity(ppm)	±1.0		
Storage temperature range(°C)	−40 to +105		
Operating temperature range(°C)	−20 to +70	−40 to +85	−40 to +105
Frequency versus temperature characteristics(ppm) (Refer to 25°C)	±20 30 ±50 ±100	30 ±50 ±100	50 ±100
Supply voltage(V)	1.60 to 3.63		
Current consumption (mA)	5(Typ.)/20MHz@3V, 8(Typ.)/50MHz@3V (Depending on the frequency and supply voltage)		
Output level	CMOS		
Symmetry(%)	50 10, 50±5		

"Stand-by" CTRL table

Stand-by	Output
"H"	Output enabled.
"L"	Oscillation stop and High impedance output.

A bypass capacitor should be connected between V_{DD} and GND so that the crystal oscillator can have a stable oscillation.

- Please feel free to consult us about customized specifications.
- All specifications and drawings are subject to a change without notice.

Dimensions

Unit:mm

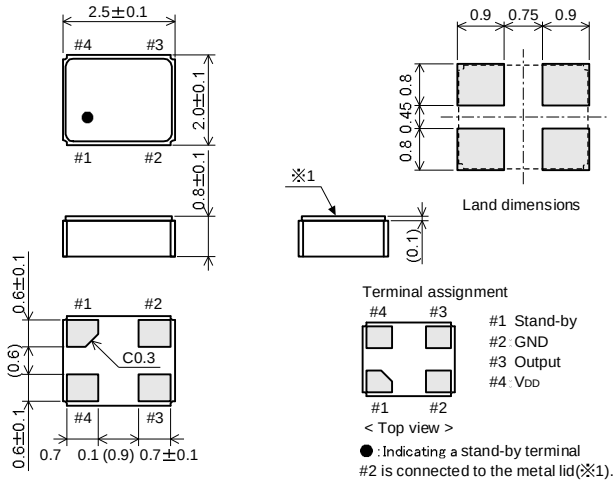

Taping

Unit:mm

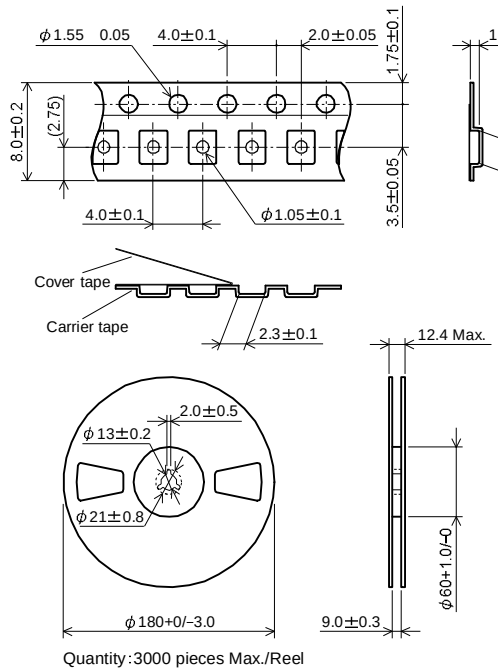

Quantity:3000 pieces Max./Reel

RIVER ELETEC CORPORATION
URL http://www.river-ele.co.jp

Head Office	2-1-1 Fujimigaoka Nirasaki Yamanashi Japan Phone 81-551-22-1211 Fax 81-551-22-6645	River Electronics(Singapore)Pte.Ltd Taiwan River Co.,Ltd.	Phone 65-6258-7874 Phone 886-2-8988-2811	Fax 65-6258-7366 Fax 886-2-2983-4785
Tokyo Office	4-40-14 Nishishinjuku Shinjuku-ku Tokyo Japan Phone 81-3-3377-5444 Fax 81-3-3374-2865	Xi'an River Electronics Corporation	Phone 86-29-88697274	Fax 86-29-88635134
Osaka Office	Phone 81-6-6998-4888 Fax 81-6-6998-4899			